YZYX140 Series Spiral Oil Press

Instruction Manual

Models: YZYX140, YZYX140-8, YZYX140CJ, YZYX140CJ(S), YZYX140GX

Digitized copy of the printed manual (edition of July 2021).

Table of Contents

1. Summary 1
2. Main technique features 1
3. Structure and working principle 3
4. Installation 3
5. Maintenance and Lubrication 5
6. Adjustment and operation 6
7. Main failure and fix methods 14
8. Dismantling and Assembly of Main Spare Parts 18
9. Instructions for use of electrical control box of WK series temperature control oil press 22
10. Technical service 24
11. Addendum 24
12. Supplied accessory 28
13. Transportation and Storage 28

Postscript

Diagram

Page numbers refer to the printed manual.

1. Summary

Our series YZYX140 spiral oil press is suitable for squeezing oil from rapeseeds, cottonseeds, soybeans, peanuts, flax seeds, tung seeds, sunflower seeds and palm kernels, etc. The product has advantages of small investment, large processing capacity, simple matching, easy maintenance, strong adaptability and high oil output efficiency.

The product conforms to the “Technology Standard of Agricultural Spiral Oil Press” under JB/T9793-2013 of the People's Republic of China.

YZYX140 is basic two step pressing spiral oil press; YZYX140-8 is three step pressing spiral oil press with larger cavity compression ratio and suitable for experienced users who want lower residual oil rate in cake.

YZYX140CJ is four step pressing oil press with a lengthened pressing chamber, which has a higher pressing pressure and a better pressing effect. YZYX140CJ(S) is three step pressing oil press with a lengthened pressing chamber.

In addition, YZYX140 series models with ordinary gearboxes have been improved to bevel gear transmission gearboxes, with good gear teeth meshing performance, large coincidence degree, and improved bearing capacity, so that the transmission mechanism of the reduction mechanism is stable, noise is reduced, and gear service life is extended.

YZYX140GX series oil press is commonly known as oil press with larger gearbox. Its deceleration mechanism is bevel gear transmission, which runs smoothly, increases transmission strength, reduces noise and prolongs service life.

Above models of oil presses do not have cake crushing device. If there is a cake crushing device, letter "S" is added after the model number. If the temperature control model with electric heating device, the letter "WK" is added after the model number.

2. Main technique features

(1) Main features

The following performance parameters can be achieved in the normal and continuous pressing operation and the oil seeds with medium and above quality level (soybean reaches the third grade specified in GB/T 1352, peanut kernel reaches the third grade specified in GB/T 1532, and rapeseed reaches the fourth grade specified in GB/T 11762) have been cleaned and roasted according to JB/T 11762 the "oil pressing process" stipulated in Appendix A of the T9793-2013 standard.

OIL SEEDS \ ITEMS	PROCESSING CAPACITY (T/24H)	RESIDUAL OIL RATE IN CAKE (%)	OIL YIELD EFFICIENCY (%)	ELECTRIC POWER CONSUMPTION (KW·H/T)
Rapeseeds	9~11	≤7.6	≥82	≤34
Cotton seeds	9~11	≤6.8	≥77	≤54
Soybeans	8~10	≤6.5	≥67	≤51
Peanut kernels	9~11	≤6.5	≥92.3	≤34

Note:

① As the variety, quality and oil content of oil crops in different regions are different, as well as differences in operating conditions and other factors, it is normal if the actual results are different from the indicators listed in the table.

② The daily processing capacity (T/24H) refers to the processing capacity when pressing once in hot pressing method. If the raw material is pressed twice or three times (such as cold pressing), the processing capacity is one-half or one-third of the value. By analogy, the more pressing times, the lower the processing capacity.

(2) Technical specification

ITEM	YZYX140(-8)	YZYX140CJ	YZYX140CJGX
Revolving speed of spiral axis (r/min)	33~41		30~41
Transmit method	Triangle belts transmit		
Motor (kW)	18.5 (Y180M-4) or 22 (Y180L-4)		
Measurement (mm)	2020×750×1430	2220×750×1430	2300×800×1430
	2020×1650×1430 (with motor stand and protection covers)	2220×1650×1430 (with motor stand and protection covers)	2300×1600×1430 (with motor stand and protection covers)
Weight (kg)	806	980	1055

Note: This weight is without weight of motor.

3. Structure and working principle

(1) Structure

This machine is mainly composed of a base, a deceleration mechanism, a feeding mechanism, an adjustment mechanism, a screw shaft part and a squeezing part.

(2) Working principle

Under the combined effects of several forces, such as the pressure generated as the space in the squeeze chest becoming smaller, the propulsion of the revolving spiral axes, the resistance of the multilateral arc curves on the squeeze loops, the extrusion & friction between the oil plants, oil was squeezed from the oil plants coming out of the squeeze bars and the grooves of the squeeze loops. The residue is conveyed to the end of the press chest and discharges in thin strips of cakes from the space between the spiral for cakes out and the loop for cakes out. Then the whole separation process of oil from oil plants is completed.

4. Installation

(1) Installation

① This product is designed with a motor stand and a steel plate base; when installing, use bolts to connect the motor stand and the steel plate base firmly, and then use anchor bolts to firmly install the oil press on the cement foundation, and need to correct the level, the depth of the foundation is 500mm, 100mm above the ground, and the depth of the anchor bolt holes is not less than 300mm.

② Use B type (5 pieces) triangle belt to transmit.

A. Length of triangle belts for oil press with ordinary gearbox shouldn't be less than 3200mm (length of motor stand is L1000).

B. Length of triangle belts for GX series oil press with enhanced larger gearbox shouldn't be less than 3200mm (length of motor stand is L800).

(2) Electronic equipment

① Motor configuration: Should use Y series electric motor. Usually use motor of 18.5kW, 4 poles electric or motor of 22kW, 4 poles. Different oil plants and different pressing methods should use motors with different powers: motor of 18.5kW, 4-poles can be used when pressing rapeseeds, peanut kernels and cold-pressing soybeans. Motor of 22kW, 4-poles can be used when pressing cottonseeds, tung seeds and hot pressing soybeans. The user can configure the size of the motor pulley according to the required screw shaft speed and motor speed.

Attachment: Rotation speed of spiral shaft and pulley size of motor for reference.

YZYX140 (bevel gears) Table of rotation speed of spiral shaft and pulley size for motor

ROTATION SPEED OF SPIRAL AXES (R/MIN)	(MOTOR OF 18.5KW, 4 POLES OR MOTOR OF 22KW, 4 POLES) OUTER DIAMETER (GROOVE TYPE) × INNER HOLE (MM)
34	Φ120B5×Φ48 (standard configuration)
40	Φ140B5×48

YZYX140GX Table of rotation speed of spiral shaft and pulley size for motor

ROTATION SPEED OF SPIRAL AXES (R/MIN)	(MOTOR OF 18.5KW, 4 POLES OR MOTOR OF 22KW, 4 POLES) OUTER DIAMETER (GROOVE) × INNER HOLE (MM)
31	Φ140B5×48
36	Φ160B5×Φ48 (standard configuration)
40	Φ180B5×Φ48

③ It is recommended that users install a 0~100A three-phase AC ammeter and voltmeter so as to judge the pressure change of the press chamber according to the magnitude of the current.

(3) Protection

⚠ DANGER — belt drive (hand caught by belt)

If the user configures the motor and the protective cover by himself, when installing the oil press, the big belt pulley should be close to the wall (or a place no people passing by), and a protective cover should be added outside the pulley to protect the belts so as to avoid belt injury accident during work. It is recommended that users purchase our matching protection covers.

5. Maintenance and Lubrication

(1) Maintenance

① Before running the machine, be sure to tighten the bolts and the nuts to avoid the components getting loose.

② Check whether the power source and the size of the lead wires meet the electric motor's requirement, and make sure the revolving direction is the same as that indicated on the sign plate.

③ In order to avoid any fault when run the machine next time, must clear out the residue completely in the press cage after squeezing.

④ To guarantee the service-life of the machine, lubricate the machine as instructed. And users must carry out regular lubricating oil change and maintenance of the gearbox.

(2) Lubrication

In order not to pollute the oil plants and the cake, the lubrication points 2 and 3 (refer to the table below) should be filled with vegetable oil, but the tung seed oil can't be taken as lubricant. The deceleration part should be filled with 8~9 kilograms of N32# machinery lubricant (YZYX140GX series oil presses should be added with 15kgs of N32# machinery lubrication oil). Observe the oil scale, the oil level should be close to the highest point of the oil scale. It is strictly forbidden to start the oil press without adding lubrication oil, otherwise the gears and bearings will be damaged.

Refer to below table for lubrication oil type

NO.	LUBRICATION PART	TYPE	ADD PERIOD	CHANGE PERIOD
1	Gears in deceleration box	N32# machinery lubricating oil		Every 6 months
2	Umbrella gears (Y type)	Plant oil	1-2 times each shift	
3	Cover of adjusting bolt	Plant oil	1-2 times each shift	
4	Every rolling bearing	Grease		Once a year

6. Adjustment and operation

(1) Preparation before using

① After the oil press is installed, add lubricating oil as instructed, check whether the parts are fastened, and whether the operating handle and latch plate are flexible and reliable.

② Turn the big triangle belt pulley by hand to rotate the spiral shaft, check if the working parts are in normal condition. Make sure the press chest is smooth, no abnormal noise and debris stuck the press cage. Fix it in time if any problem.

③ Check and adjust the tension of the belt.

④ Adjust the space for cakes out, loosen the tight nut, turn the handle counterclockwise to make the spiral for cakes out and the loop for cakes out come into contact, and then turn clockwise for 4~5 turns to separate the spiral for cakes out from the loop for cakes out. And then lock with the tight nut.

⑤ Start the electric motor; make sure the revolving direction of the spiral axis follows the direction indicated on the deceleration box. Let the oil press idle (without feeding any raw material) generally for half

an hour. During this period, pay attention to the sound of oil press and the temperature of the bearing parts. Shutdown the machine in time when there's any problem.

(2) Pre-processing to oil plants

The oil plants should be pre-processed before pressing. The quality of preprocess to the oil seeds directly affects the effect of oil production. Good preprocess: a. increases the oil yield efficiency; b. obtains oil and cake with highest quality; c. increases the processing capacity and reduces energy consumption; d. Ensures device security.

Pre-process generally includes:

① Cleaning: Remove sediment, stones and metals in the oil material through cleaning. Poorly cleaned oil will accelerate the wear of parts, even lead to damage to the oil press, and reduce the oil yield.

② Shelling and separation: In order to give full play to the production capacity of the oil press and reduce oil loss, the oil crops such as peanuts, tung seeds, cotton seeds and tea seeds should be shelled and the shells and the kernels should be separated and then pressed (this is an essential process).

③ Crushing and flaking: Rapeseeds and soybeans (if cold-pressing) can generally be pressed as a whole, but after crushing and flaking, the efficiency of pressing is higher than that of whole-grain pressing. Other oil corps are also better after crushing and flaking.

④ Roasting: good roasting result is the key point to achieve higher oil yield efficiency. The moisture and the squeeze temperature can be controlled by roasting. Customer could select proper roasting equipment from us.

Suitable moisture and temperature of oil plants for reference

ITEMS	RAPESEEDS	GROUNDNUT KERNELS	COTTON SEEDS	TUNG SEEDS	SOYBEANS (HOT PRESSING)	SOYBEANS (COLD PRESSING)
Moisture (%)	1~2	1~2	2~2.5	2~2.5	1.5~2.5	8~10
Temp. (°C)	130~140	120~125	120~130	110~120	120~125	room temp.

(3) Operation points

① The temperature in the pressing chamber has a great influence on the pressing effect and oil yield of the oil press. If there is not enough temperature, normal pressure can not be formed in the pressing chamber, and cakes can't be formed, which will affect the oil output. In order to have enough temperature in the pressing chamber, there should be a process of raising the temperature before starting to pressing oil. This process is called "running in to heat up". The operation method is as follows:

a. Mix 10% hot water with smashed oil cakes (except for tea seed cake) and then squeeze them repeatedly. Make sure to feed the smashed cakes slowly (can't be too fast and the cake can't be too dry). In the meanwhile, see if cakes comes out from the cakes-out part. If cakes do not come out, turn the adjusting bolt counter-clockwise by 1-2 circles to enlarge the space for cakes out. The feeding quantity only can be gradually increased when the cakes come out normally and should keep observing whether the feeding and cakes are in normal condition. The moisture in the cakes will gradually decrease when repeatedly pressing, so must pay attention to the moisture and add water properly.

During the process of "running in to heat up", improper operation may make the spiral axes stuck and damage the squeeze cage, squeeze loops and machine support. So we specially remind customer: the cakes for "running in to heat up" the machine can't be too dry and the moisture should be always observed. The moisture should be maintained around 10% to avoid accident.

b. Normally the temperature increases gradually from the feeding part to the cake out part. Do not start pressing oil material until the temperature outside the squeeze loops at the cake out part feels hot.

② Clean up the site, prepare all auxiliary equipment and containers, and clean the oil press at the same time. Use a hammered iron wire and a thin hacksaw blade to poke out the cakes in the gap of the squeeze bars, clean the cakes between the squeeze loops, and use a screwdriver to remove the cakes accumulated in the feed hole at the bottom of the hopper (should be done in a shutdown state).

③ After the temperature gets up, feed oil plants into the feed hopper directly if use cold pressing (note: feeding slowly, add feeding quantity gradually only when the feeding and cakes come out normally). If use hot pressing, the oil plants should be roasted. The roasting results directly affect the oil yield efficiency, oil quality and cake quality. It should be ensured that the roasted raw materials contain appropriate moisture for pressing. If the water content is too high, the material will form agglomerates (the oil is thin and pasty), the feeding is difficult, the normal pressing force cannot be formed in the pressing chamber, the oil color is light and the oil has lots of bubbles, the oil flow is not smooth, and the cake is large and soft and with oil stains on the surface of the cake. If the water content is too low, the material is powdery, and it is easy to coke and block the pressing chamber, and the normal pressing force can not be formed. Cakes are black and with cracks on the back. And the cakes smell of burnt smell. In severe cases, there will be blasting, smoke, and even no oil.

④ Revolve the adjusting bolt clockwise by 4-5 circles to enlarge the space between the spiral for cakes out and the loop for cakes out. Feed the roasted oil plants slowly and evenly into the hopper. Feeding should not be too violent or intermittent. At the beginning of pressing, if the feeding is too strong or no material is fed for a long time, it is easy to make the material form a hard block in the squeeze loops, causing blockage, and the pressure of the pressing chamber suddenly increases, causing the squeeze loops and squeeze cages to burst. The normal pressing can only be carried out after the feeding is smooth.

⑤ Turn the adjusting bolt counter-clockwise to adjust the cake's thickness slowly till the oil comes out normally (Turn the adjusting bolt counterclockwise to reduce the thickness of the cakes and increase the pressure; rotate the cake clockwise to increase the thickness of the cakes and reduce the pressure), and then lock with the tight nut. Normal thickness of cakes is around 1.5~2mm. The cakes should neither be too thin nor too thick. If it is too thin, the pressure of the pressing chamber will increase, and even serious accidents such as the screw shaft jamming and the bursting of the pressing cage will occur; if it is too thick, the cake will contain too much oil. In the case of normal production, most of the oil is coming out from the squeeze bars, followed by the 5# squeeze loops, and a small amount of oil dripping from the squeeze loops at the rear end. If the oil outlet moves to the feeding hopper end, the oil color is light and the foam is much, indicating that the moisture content of the raw material is too high or the cake is too thin. If the oil outlet moves to the end of the cake out side, and the oil color is dark and unclear, it means that the moisture content of the raw material is too low. Moving the oil outlet position forward or backward is not good for improving the oil output rate.

⑥ During the pressing process, the cake condition should be observed frequently. When it is normal, it is tile-shaped, not sticky when pinched by hand, smooth on the inside, wrinkled on the outside, and no oil stains on the surface. If the cake is crisp and easy to broken, means the moisture of oil material is low. If the cake is soft and big, with oil stains on the face, means the moisture of the material is high. It is abnormal that the moisture content of the raw material is too high or too low, and measures should be taken in time. The normal slag is about 5% of the oil material. Too much slag is an abnormal phenomenon. The reason may be that the squeeze loops are not pressed tightly, or it may be that the moisture of the material is not proper. If the moisture is too high, strip-shaped slags will come out of the squeeze loops; if the moisture is too low, it will be extruded into powdery slags.

⑦ Frequently check if the temperature and the lubrication are in normal condition, and listen if there's abnormal noise in the machine. Fix problems in time to avoid accident.

⑧ Shuttle-down the oil machine

a. When need to stop the machine normally, all the material should be squeezed out, the screw shaft should be advanced and retreated several times repeatedly, the remaining material in the pressing

chamber should be removed, the cake should be adjusted to the thickest, and then the machine should be stopped to prevent the accident occurring when powering on again because of hot oil material formed hard blocks after cooling down.

b. In case of emergency shutdown due to power failure or other reasons, the material opening should be opened first and the material should be released. Then turn the large V-belt pulley in reverse by hand to withdraw the screw shaft. If the screw shaft does not move back, the large pulley cannot be forcibly reversed by multiple people or other methods, but the pressing bolt should be loosened and removed. Take off the squeezing cage, try to loosen the squeeze loops (pour hot water to the squeeze loops to soften the material or dry cakes in the squeezing chamber), then pull out the screw shaft, and clean the squeezing chamber. Do not start the machine again without cleaning.

(4) Filtration

The crude oil coming out of the oil press is mixed with residue so should be filtered.

Our company produces series plate frame oil filter, vacuum oil filter, air pressure oil filter and centrifugal oil filter with good performances. Welcome to purchase.

Customers who don’t have oil filter can adopt natural precipitation method. Operation is as following:

① Filter the crude oil with 40-60 item cooper wire cloth to remove most of the residues (the residues can be pressed again with oil material), and keep the oil in container for a certain time, then the oil will become clean naturally.

② The squeezed rapeseed oil can be cleared up by hydration treatment. The measures are: add 3%-5% hot salty water with 10% density into the roughly filtered oil and stir the oil until there are suspended solids appearing on the oil surface. And after 24 hours’ precipitation, the oil will turn to be clear.

(5) Precautions:

① Operator needs to be professionally trained, familiar with the squeezing crafts and the functions of the oil press machine.

② Before operating the new machine, add lubricating oil into the deceleration box (N32# lubricating oil).

③ No start the oil press when there’s no space between the spiral for cakes out and the loop for cakes out.

④ Don’t feed material in big amount before the temperature goes up; the cake mustn't be adjusted to too thin. Strictly prevent stuck the oil press.

⑤ Make sure no metal impurity into the squeeze chest.

⑥ When the feeding mouth is blocked, it is not allowed to help feeding by hand or metal rod.

⑦ Fix the failure in time when spiral axes blocked, otherwise, don’t start the machine again.

⑧ When the machine is shut down due to power failure or other reasons, it should be handled in accordance with the above-mentioned "emergency shutdown" method.

⑨ Don’t stack the cakes until cool them down below 40°C to avoid spontaneous fire.

(10) The workplace is required to be moisture-proof and fire-proof.

(6) Safe operation regulation

For your own safety and the normal use of the machine, please familiarize yourself with the operation method of the oil press and strictly abide by the following regulations. Personal injury accidents or machine damage caused by violation of the following regulations shall be borne by the user. Read the instruction before operating the machine.

① Before using the oil press, you should read this manual carefully.

② Users should have basic knowledge and skills in mechanical and electrical safety to ensure personal safety and normal use of the machine.

⚠ DANGER — Be Careful (do not touch with hands)

③ When the oil press is working, hands and any other parts of the human body are strictly prohibited from touching any rotating parts of the oil press. It is forbidden to wear skirts and sleeves that are too long, clothes that are too large, long hair or wear jewelry that is too long to operate the machine. In order to prevent the cake crushing stick rotating in the machine from hurting the hand, a warning sign of "hand injury" is specially pasted on the rack, and we hope that the user will pay attention to it (see the picture for the sign).

⚠ Hot surface — risk of scalding

④ When the oil press is working, it is strictly forbidden to open the press cage cover to observe, so as to avoid being scalded by the splashing oil.

⑤ It is strictly forbidden to operate the machine with other operation methods not recommended in this manual or other actions that may cause danger.

⑥ The drive belt of the oil press must be equipped with a protective cover to ensure safe production, and it is not allowed to start the machine without a protective cover.

⑦ Minors and people over 60 years old are not allowed to operate this oil press.

7. Main failure and fix methods

FAILURE	REASONS	FIX METHODS
Spiral shaft stops rotating suddenly (stuck)	① Feeding oil plants before heating the press chest. ② The cake for running in the machine is too dry. ③ The cake is too thin and pressure in the chest is too high. ④ Oil plants have hard shells or hard impurities mixed into the oil plants and went into the press chest.	① Raise the temperature of the press chest, and wait for the cake to be normal before feeding formally. ② Increase the cake's moisture. ③ Turn the adjusting bolt clockwise to enlarge the thickness of the cakes. ④ Turn off the power, disassemble the upper press cage, loosen the squeeze loops, pull out the screw shaft, and clean the press chest.
Feeding blocked. No oil comes out.	① The work-sections of the new squeeze loops and squeeze spirals are coarse. ② The oil is accumulated in the press chest and the oil material is mixed with oil. ③ The oil outlet grooves of the squeeze bars and the squeeze loops are blocked, and the oil discharge is not smooth. ④ The oil content of the oil material is too high, and the original oil discharge channel is too small. ⑤ The moisture of the oil material is too low when press them in hot pressing way.	① Add water (about 10%) to the dry cakes (except tea seed cake), then slowly add them to the oil press and press them until they are smooth. ② Add a small amount of dry cakes to the oil material and squeeze them together, and re-feeding should be from as little as possible, not too much. ③ Remove the squeeze loops and the squeeze bars, soak them in hot water for tens of minutes, and use a wire brush to clear them. ④ Replace the squeeze bars and the squeeze loops with deep oil outlet grooves (or squeeze loops with double-sided oil outlet grooves). ⑤ Insure the oil plants contain proper moisture.
Cake is abnormal	① Moisture of raw material is too low. ② Moisture of raw material is too high.	① Increase the moisture. Shorten the roasting time. ② Reduce the moisture (by roasting).
Oil leaking from lock nut	① There are slags on the end faces between the squeeze spirals, forming a gap. ② The lock nut is not compressing the bolt tightly.	① Stop the oil press, dismantle the squeeze spirals and clean their end faces. ② Fasten the lock nut.
Oil output is too low	① Oil plants with too low oil content or contain many impurities. ② Moisture of raw material is improper. ③ The chest temperature is low. ④ Spare parts are worn out.	① Screen and clean the oil plants. ② Adjust the temperature and the moisture of the roasted seeds. ③ Power on and run-in and heat up according to the instructions to increase the temperature of the press chest. ④ Replace worn parts.

There is oil flowing out from the material discharging gate (returning oil)	① Squeeze bars installed in a opposite direction. ② The oil outlet grooves of the squeeze bars and the squeeze loops are shallow, oil discharge is not smooth. ③ Cake is too thin. ④ High oil content of the raw material, oil can't be discharged in time. ⑤ Oil outlet grooves are blocked.	① Install the squeeze bar correctly. ② Put the squeeze loop with the deep oil groove in front of the 5# squeeze loop. ③ Enlarge the space for cakes out, increase the thickness of cakes. ④ Change the spare parts, choose right squeeze loops and bars suitable for oil plants with high oil content. ⑤ Clean the oil outlet grooves.
Residue cakes have oil stains on the surface	① Too high moisture of the oil plants. ② Temperature in the press chest is too low. ③ Squeeze spirals and loops are not smooth. Feeding is not smooth. ④ Oil outlet grooves blocked, oil can't be discharged in time. ⑤ Spare parts are worn out.	① Lower the moisture of the oil material (by roasting the oil material). ② Running-in the machine to raise the temperature in the press chest. ③ Press cakes mixed with water to make the squeeze loops and the squeeze spirals smooth. ④ Clean the oil outlet grooves with wires or saw blades. ⑤ Change the spare parts.
Low processing capacity	① Squeeze spirals and squeeze loops are not smooth. ② High moisture in oil plants. ③ Cake is too thin. ④ Squeeze spirals are worn out. ⑤ Oil plants have been squeezed by many times.	① Press cakes mixed with water to make the squeeze loops and the squeeze spirals smooth. ② Lower the moisture of the oil material (by roasting the oil material). ③ Increase the thickness of the cakes. ④ Change to new squeeze spirals. ⑤ Use hot way to squeeze the raw material for just one time.
Too many slags	① The oil outlet grooves of the squeeze loops and the squeeze spirals are too deep. ② Cake is too thin; Pressure in squeeze chest is too big. ③ Squeeze loops are not pressed tightly. ④ Oil plants have been squeezed by too many times. ⑤ Spare parts are worn out. ⑥ Oil plants are too dry.	① Adjust the positions of squeeze bars and squeeze loops. ② Increase the thickness of the cakes. ③ Fasten the squeeze loops. ④ Reduce squeezing times. ⑤ Change spare parts. ⑥ Increase the moisture of the oil plants.
Press cages are broken	① Feed too much when start the machine. ② Metal sundries went into the squeeze chest. ③ Residue cakes for running in the machine is too dry. ④ Space between the spiral for cakes out and the loop for cakes out is too narrow. Forced feeding. ⑤ Oil plants have been squeezed by many times and did not add water into the raw oil material. ⑥ Begin to feed and squeeze before cleaning the residues from the press chest.	① Must feed slowly, and the feeding amount should be increased after the feeding is smooth and the cake coming out in a normal condition. ② Select and clean the oil plants carefully. ③ Keep the residue cakes for running in the machine with proper moisture. ④ Enlarge the space for cakes out. ⑤ Increase oil plants' moisture to lower the pressure in the press chest. ⑥ Clean the squeeze chest before starting the machine again.

Machine rack damaged	① When the screw shaft is stuck, forcibly reverse the screw shaft. ② When the screw shaft is stuck, the large V-belt pulley is forcibly reversed by manpower.	① It is strictly forbidden to reverse the screw shaft. ② It is forbidden for multiple people to forcefully reverse the large V-belt pulley.
Spiral axes is broken	① The thrust bearing close to the lock nut has been installed oppositely. ② The hex nut is screwed too tightly so it is crushing the bearing.	① Install the thrust bearing correctly. ② Need appropriate space between the nut and the bearing.

8. Dismantling and Assembly of Main Spare Parts

In order to re-assemble the machine successfully, keep in mind the situation of the assembled machine and the order of dismantling. Assemble the machine according to the reverse order of dismantling.

(1) Dismantling and assembly of the squeeze cage department (squeeze bars and squeeze loops)

① Squeeze cage: turn the handles on the spiral axes clockwise, draw out the spiral axes. Then insert a steel stick into the pressing bolt, turn it counter-clockwise to loosen the pressing bolt. Remove the connecting bolts at both ends of the top squeeze cage, then remove the bolts connecting the top squeeze cage and the bottom squeeze cage, and loosen the two bolts connecting the bottom squeeze cage and the frame for a few turns. Loosen the bolts connecting the frame and the base to remove the top squeeze cage, and then take out the squeeze bar loop assembly and the squeeze loops.

② Squeeze bars: Pad the squeeze bar loop, be careful not to pad the squeeze bars, punch out one of the squeeze bars, and the rest of the squeeze bars will automatically get loose.

③ Installation of squeeze bars: clean the dismantled squeeze bars, put them on flat ground in sequence. Put the loop of squeeze bars on flat ground and arrange all the 23 bars in sequence inside the loop, close to the inner wall. The oil outlet grooves shouldn't be close to the inner wall and all the grooves should be toward one direction. Hammer the spacer into the bars until its end is horizontally on the same level with the loop of squeeze bars. It shouldn't be too tight or too loose. Hammer the inside of the bars to make the bars close to the inner wall until no bar protruding when touches by fingers.

④ Installation of squeeze loops: The arrangement of the squeeze loops has a great influence on the performance of the oil press. The original order must be followed when re-install the squeeze loops. The end face of each squeeze loop has a radial oil outlet groove for oil discharging. When installing, the end face of the squeeze loop with the oil outlet groove should face the pressing bolt, and the side of the 1# squeeze loop with the inner slope (chamfer) should face the gearbox, and the positions of the other squeeze loops should not be wrong (see the installation drawing of the press cage). The gap between adjacent squeeze loops should not be greater than 0.1mm.

⑤ Installation of squeeze cage: Install the squeeze bar loop near the gearbox (note that the direction of the deep oil outlet groove in the squeeze bars should be toward the gearbox), put the squeeze loops in the original arrangement, and use the pressing bolt to pre-tighten the squeeze loop. Hit the squeeze loops with a hammer while pressing, and do not use too much force during pre-tightening, otherwise it will damage the thread of the squeeze cage. After the top press cage is installed, firstly press the 10pcs M16 bolts slightly, and then use the afterburner to tighten the pressing bolt. While tightening the pressing bolts, tap the outer ring of the squeeze loops lightly to make them parallel and close to the press cage. After the squeeze loops are pressed, they are generally not loose, and slight twisting of a small number of squeeze

loops during oil squeezing is also allowed. Alternately press the 10pcs bolts from the middle to both ends, then tighten the 2pcs bolts connecting the squeeze cage and the gearbox, and then tighten the 2pcs bolts connecting the frame. Finally, press the bolts connecting the bottom press cage and the frame and the bolts connecting the frame and the base.

(2) Dismantling and assembly of the spiral axes (refer to screw shaft drawing)

① Dismantling of the spirals: It is a little bit difficult to disassemble the squeeze spirals that have been used. At this time, the squeeze spirals should be heated (fire roasted) or removed while hot after oil squeezing. The specific method is:

Remove the hexagonal nut, remove the adjusting bolt and the thrust ball bearings at both ends, clamp one end of the screw shaft with a pipe wrench, insert the other end into the lock nut hole with a force rod, and turn clockwise to loosen the lock nut. Then quickly remove each section of the squeeze spirals and the spirals for cakes out, etc. Note: It is strictly forbidden to hit the outer circle or thread of the squeeze spirals with a hammer to avoid damage to the parts.

② When installing the squeeze spirals, they should also be installed in the original order, otherwise it will cause changes in the performance of the oil press or quality accidents. The loose rings with large inner holes of the two thrust ball bearings should be installed on the end face close to the adjusting bolt, and lubricated with grease. The hexagonal nuts are pressed against each other, but a gap of 0.2~0.3mm should be maintained between the end face of the thin nut and the end face of the bearing (the bearing can be rotated by hand).

Note: All threads related to the screw shaft are left-handed threads (commonly known as: reverse thread).

(3) Dismantling and assembly of the deceleration box

① YZYX140 with ordinary deceleration box

(a) Take out the 4pcs bolts on the bearing 220 through cover, and remove the bearing through cover; take out the bolts of the top cover, remove the top cover, and take out the big gear.

(b) Use 2pcs M10 bolts to screw into the threaded holes of the bearing 212 through cover and the bearing 310 close cover, the bearing cover can be pushed out, and then the gear shaft, driving shaft, gears and other parts can be taken out in turn.

(c) When assembling, put the medium gear into the box first, then insert the gear shaft into the inner hole of the gear and install a bearing cover, and then install the bearing cover at the other end (don't forget to install the small bushing). Install the driving shaft according to above steps, and then install the big gear, the top cover and the bearing through covers.

② YZYX140GX with larger deceleration box

Disassembly and assembly of YZYX140GX with larger deceleration box.

(a) First remove the tension pulley on the upper part of the deceleration box cover, remove V-belt on the hopper and the small V pulley and large pulley on the deceleration box.

(b) Remove the hole cover, first take out the long bolt in the box, then take out all the bolts of the box cover and the box combination, and take out the bolts of the bearing covers and the bearing stands, and then remove the deceleration box covers, the bearing through covers and the bearing covers, etc.

(c) Remove the gears of the long shaft with gear and the short shaft with gear in turn, and remove the thin 43 gear and the thick 43 gear.

(d) When assembling, first put the short shaft with gear and the thick 43 gear (with sealing plug) into the deceleration box, then install the long shaft with gear part (install the flat key, thin 43 gear and bearing), and then assemble the deceleration box covers, the bearing caps and the bolts, etc.

Note: Assemble all oil seals, O-rings and other seals in the deceleration box (as shown in the reduction mechanism).

(e) Finally, install the hole cover, the tensioner, the hopper V-belt and the large pulley, etc.

9. Instructions for electrical control box of WK series temperature control oil press

(1) Function

① Overload protection function: When the motor is working, when the load exceeds the rated limit, it will stop running.

② Guidance for operation: observe the load, and adjust the amount of feed and the thickness of the cake according to the current.

(2) Working principle (see electrical control schematic diagram)

① Start and stop of the motor: The power enters the AC contactor KM1 through the automatic air switch QS1, passes through the ammeter A, and then enters the motor M through the thermal relay FR (overload protection device) to realize the start and the stop of the motor.

② Temperature control: The power supply enters the AC contactor KM2 through the automatic air switches QS1 and QS2, and the heating element is controlled by the temperature controller P, and the pressing chamber can be heated by EH1 manually or automatically.

(3) Installation and wiring

① Before using, the user needs to ask a professional electrician or an electrician with corresponding qualifications (obtaining the "Electrical Qualification Certificate") to install the wiring.

② Users need to prepare by himself the knife switch (100A), fuse (100A), and copper core wire with the cross-section of the power cord no less than 16 square millimeters, which should be connected to the AC input terminals (L1, L2, L3) of the electrical control box; No less than 16 square millimeters of plastic copper core wires are drawn from the AC output terminals (1L1, 1L2, 1L3) to the motor.

(4) Operation

① Hang the V-belt to make the motor rotate in the required direction of rotation. Press the green button is to start and press the red button is to stop.

② Through the knob switch (automatic and manual), the temperature control instrument can start and stop the heater, and the temperature control instrument can set different pressing chest temperatures according to the raw materials.

③ During normal operation, it is necessary to observe that the reading of the ammeter is stable below 37A, especially when the running in is on going, must pay attention to the feeding speed and quantity. If the feeding is too strong, the current will increase. If the power is not automatically cut off within 2 minutes, press the red button to cut off the power, and follow the operation points in the chapter 6 (adjustment and use of the machine) in the operation manual the eighth point (stop) to handle. And start the motor after removing the fault; if the load reaches 50A and the power is not automatically cut off, the power should be cut off immediately, and the motor should be started after the fault is eliminated; if the load reaches 50A and the power is not automatically cut off, the power should be cut off immediately. The motor can then be restarted only after the fault has been eliminated.

④ When the machine is blocked, it is generally only allowed to reverse the pulley by hand, and it is not allowed to use the motor to drive it to reverse. (Note: When the electric control box leaves the factory, the electrical appliance has been adjusted with the motor overload protection device according to 18.5 kW or 22 kW. Please do not change it at will.)

(5) Electrical failure

When an electrical appliance fails, a professional electrician is required to eliminate it (non-professional electrician users cannot disassemble and assemble any electrical components by themselves).

10. Technical service

We provide constant technical service to customers. Any questions, please feel free to contact us:

Service Tel: +86 816-2688216;

11. Addendum

(1) Rolling bearings table

Rolling bearing List

OIL PRESS MODEL NUMBER	BEARING MODEL NUMBER		POSITION	QUANTITY PER MACHINE
	140 STRAIGHT TEETH	140 BEVEL TEETH		
YZYX140 with ordinary gearbox series	6220	7220AC	Hollow shaft	2
	NJ310E	7310AC	Long shaft with gear, Short shaft with gear	3
	6212	7212AC	Long shaft with gear	2
	51311		Main shaft	2
	6206		Transmit shaft, Feeding shaft (Y type)	4
	51206		Feeding shaft (Y type feeding system)	1

OIL PRESS MODEL NUMBER	BEARING MODEL NUMBER	POSITION	QUANTITY PER MACHINE
YZYX140GX with larger gearbox series	7221AC	Thick 43 gear	2
	7313AC	Long shaft with gear (driven axle)	2
	7213AC	Short shaft with gear (drive axle)	2
	6313	Short shaft with gear (drive axle)	1
	51311	Main shaft	2
	6206	Transmission shaft, Feeding shaft (Y type feeding system)	4
	51206	Feeding shaft (Y type feeding system)	1
	61802	Feeding mechanism (tensioner)	2

(2) Seals in gearbox

OIL PRESS MODEL NO.	SEAL MODEL NO.	ASSEMBLY POSITION	QUANTITY
YZYX140 with ordinary gearbox series	Oil seal 60×85×12	Long shaft with gear (Pulley shaft)	1
	O seal 87.5×5.3	Hollow shaft	1
	O seal 109×5.3	Feeding base	1
YZYX140GX with larger gearbox series	O seal 95×5.3	Thick 43 gear	1
	O seal 80×5.3	Thick 43 gear, 68 Sealing plug	1
	O seal 65×3.55	Short shaft with gear	1
	Oil seal 80×105×16	Short shaft with gear, seal bushing	1
	Oil seal 65×90×12	Long shaft with gear	1

(3) About the pressing method

Practice has proved that in general the hot pressing method is superior to the cold pressing method in terms of oil yield and economic benefits. It is recommended that the user should try to use the hot pressing method when possible.

Using the cold pressing method, the number of pressing times increases, the capacity will be greatly reduced, the residual oil rate in the cake is also high, the power consumption is greatly increased, and the economic benefit is reduced. During the second press, the feeding is not fluent sometimes and requires frequent stirring, which is troublesome to operate and has poor efficiency.

Use this machine for continuous pressing (at least one shift) to obtain good economic benefits. It will not have good economic benefits if it is stopped from time to time or if only a small amount of oil is squeezed at one shift.

(4) Schematic diagram of squeeze loops

In order to facilitate users to identify the squeeze loops with different numbers, we have compiled a sketch of the squeeze loops of the oil press. Please pay attention to it. (See the “Diagram” section.)

(5) Table of main wearing parts

NAME	SPEC.	QTY	NAME	SPEC.	QTY

Squeeze spirals of YZYX140	2#	L180	2	Squeeze loops of YZYX140	1#	S30	1
	3#	L200	1		2#	S25	9
	4# φ115	L60	1		3#	S30	5
	5# φ115	L140	1		4#	S25	2
	6# φ115	L145	1		5#	S70	1
					6#	S25	1
Squeeze spirals of YZYX140-8	1#	L135	1	Squeeze loops of YZYX140-8	1#	S30	1
	2#	L180	1		2#	S25	9
	3#	L200	1		3#	S30	1
	4# φ105	L60	1		4#	S25	3
	5# φ105	L135	1		5#	S70	1
	4# φ120	L60	1		6#	S25	2
	6# φ120	L135	1		A5#	S70	1
Squeeze spirals of YZYX140CJ	1#	L135	1	Squeeze loops of YZYX140CJ	1#	S30	1
	2#	L180	1		2#	S25	12
	3#	L200	1		3#	S30	1
	4# φ105	L60	1		4#	S25	4
	5# φ105	L135	1		5#	S70	2
	4# φ115	L60	1		6#	S25	3
	(140CJ) 6# φ115	L135	1		A5#	S70	1
	(140CJ) 4# φ125	L60	1				
	(140CJ) 7# φ125	L135	1				
Squeeze spirals of YZYX140CJ(S)	1# (special)	L60	1	Squeeze loops of YZYX140CJ(S)	1#	S30	1
	2#	L180	2		2#	S25	6
	3#	L200	1		3#	S30	10
	4# φ105	L60	1		4#	S25	3
	5# (special)	L180	1		5#	S70	2
	4# φ120	L60	1		6#	S25	2
	6# (special)	L180	1				
Squeeze bars		157×19×19	23	The spiral for cakes out		L85	1
Spacer		157×19×10	1	The loop for cakes out			1

12. Supplied accessory

NO.	ITEM	SPEC.	UNIT	QUANTITY
1	Press cage cover		Piece	1
2	Oil pan		Piece	1
3	Flat belt	50×5×2590	Piece	1
4	Motor pulley		Piece	1
5	Motor stand		Piece	1

13. Transportation and Storage

1. The oil press must not be bumped, damp and pressed during transportation.
2. The oil press should be stored in a dry, ventilated and moisture-proof place.
3. It is forbidden to mix the oil press with corrosive or toxic substances.

Postscript

With the continuous development of industrial technology, the product will continue to be improved. Generally, minor changes are not reflected in the instruction manual. There may be discrepancies between the actual product and the instruction manual. Please understand. (July 2021)

General view, ordinary gearbox

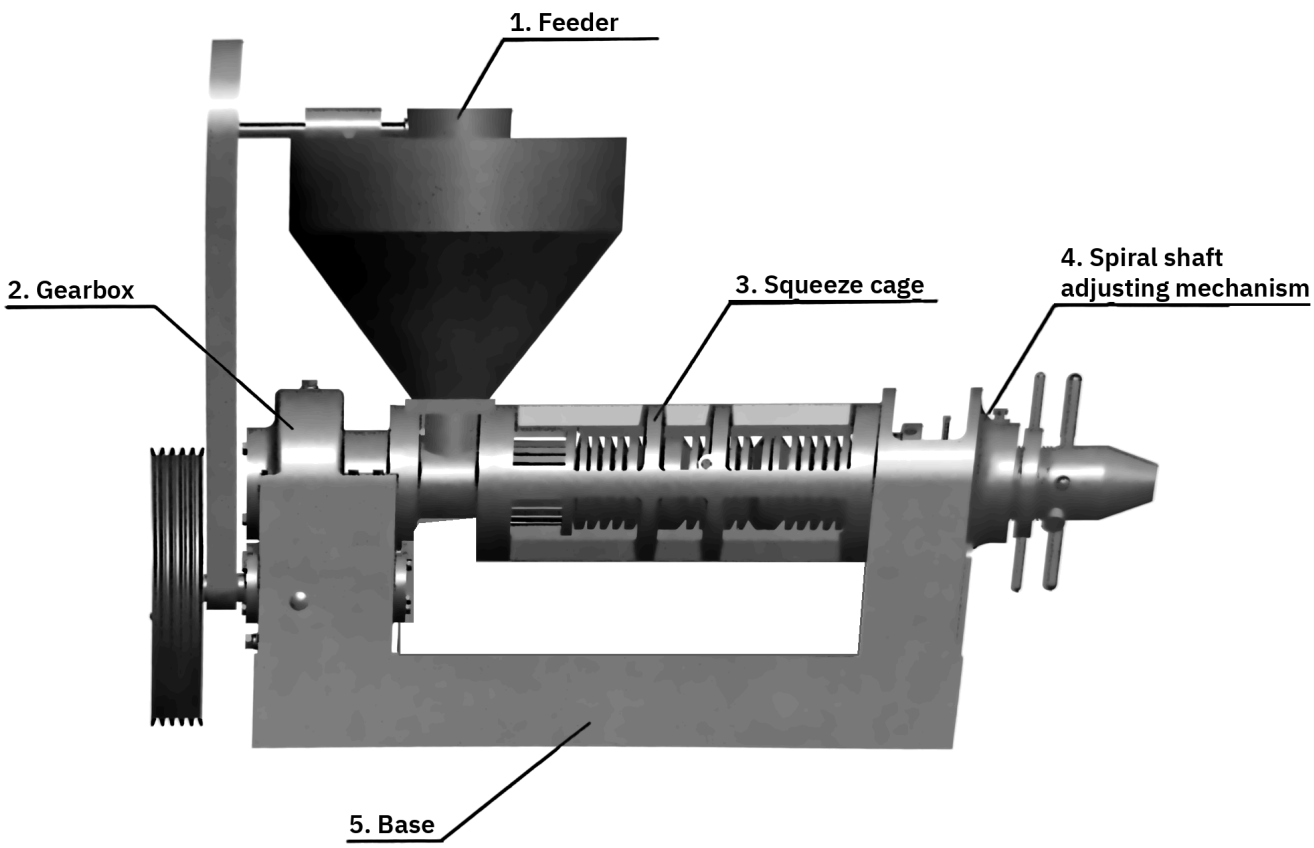

ITEM	NAME	QTY, PCS
1	Feeder	1
2	Gearbox	1
3	Squeeze cage	1
4	Spiral shaft adjusting mechanism	1
5	Base	1

General view, larger gearbox

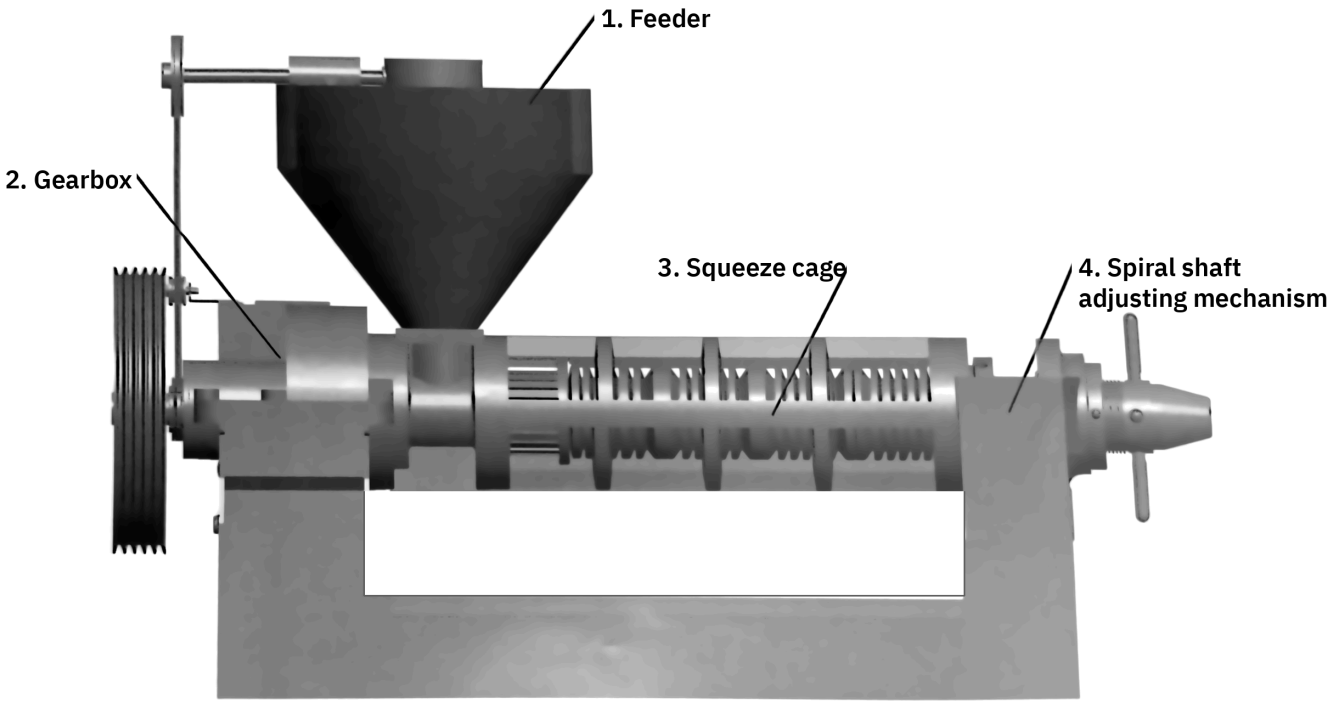

ITEM	NAME	QTY, PCS
1	Feeder	1
2	Gearbox	1
3	Squeeze cage	1
4	Spiral shaft adjusting mechanism	1

Larger gearbox

Exploded view and parts list
Items A1–A37

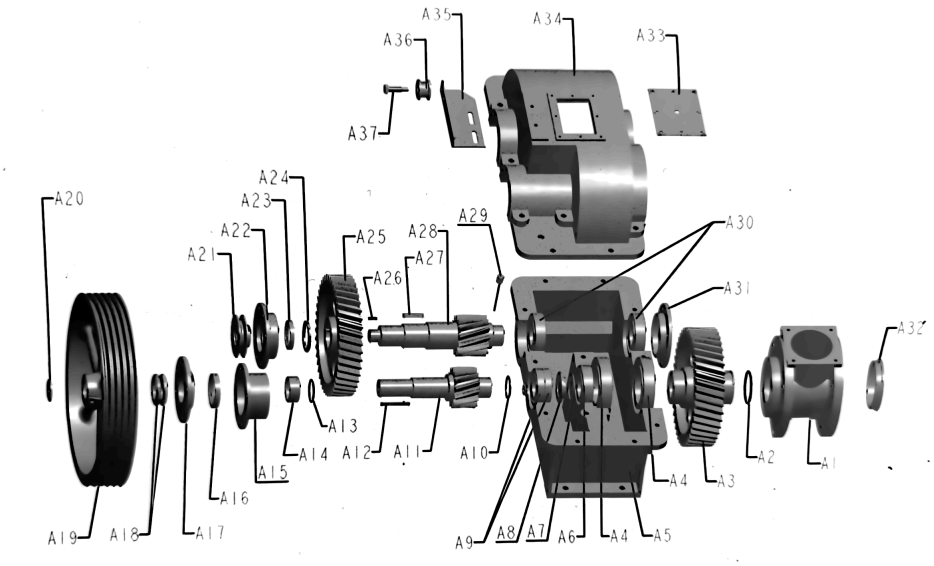

ITEM	NAME	QTY, PCS
A1	Feeding base	1
A2	O-seal 95 × 5.3	1
A3	Thick gear 43	1
A4	Bearing 7221AC	2
A5	Gearbox body	1
A6	Bearing 6313	1
A7	O-seal 80 × 5.3	1
A8	Seal-plug 68	1
A9	Bearing 7213AC	2
A10	Spacing collar 65	1
A11	Short shaft with gear	1
A12	Key 16 × 90	1
A13	O-seal 65 × 3.55	1
A14	Seal-bushing	1
A15	Bearing support	1
A16	J-oil seal 80 × 105 × 12	1
A17	I shaft cover	1
A18	Nut M64 × 2	2
A19	Big belt pulley	1

ITEM	NAME	QTY, PCS
A20	Keep plate	1
A21	Ø128 belt pulley	1
A22	Open bearing cover	1
A23	J-oil seal 65 × 90 × 12	1
A24	Spacing collar 7.5	1
A25	Thin gear 43	1
A26	Key 12 × 25	1
A27	Key 20 × 65	1
A28	Long shaft with gear	1
A29	Oil scale pole	1
A30	Bearing 7313AC	2
A31	Closed bearing cover	1
A32	Gearbox bushing	1
A33	Inspection plate	1
A34	Gearbox cover	1
A35	Tension frame	1
A36	Tension pulley	1
A37	Stud shaft	1

GUANGXIN · OIL PRESS YZYX140

Ordinary gearbox (helical gears)

Exploded view and parts list
Items A1–A29

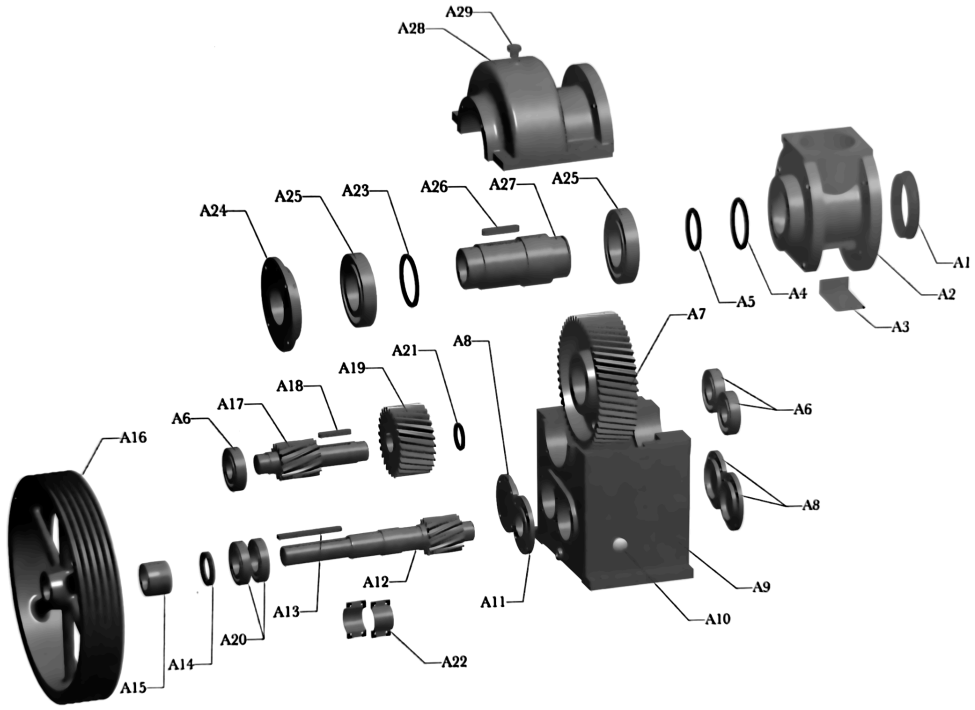

ITEM	NAME	QTY, PCS
A1	Gearbox bushing	1
A2	Feeding base	1
A3	Latch plate	1
A4	O-seal 109 × 5.3	1
A5	O-seal 87.5 × 5.3	1
A6	Bearing 7310AC	3
A7	Big gear (helical Z53)	1
A8	Bearing cover 310	3
A9	Gearbox body	1
A10	Oil scale A20	1
A11	Bearing cover 212	1
A12	Long shaft with gear	1
A13	Key C16 × 166	1
A14	Oil seal 60 × 85 × 12	1
A15	Flat belt pulley 85	1

ITEM	NAME	QTY, PCS
A16	Big belt pulley 580	1
A17	Short shaft with gear	1
A18	Key A16 × 85	1
A19	Medium gear (helical Z27)	1
A20	Bearing 7212AC	2
A21	Small bushing	1
A22	Jilt oil board	1 set
A23	Large ring	1
A24	Bearing cover 220	1
A25	Bearing 7220AC	2
A26	Key A20 × 95	1
A27	Hollow shaft	1
A28	Gearbox cover	1
A29	Ventilation plug M20 × 1.5	1

GUANGXIN · OIL PRESS YZYX140CJ

Spiral shaft

Exploded view and parts list
Items C1–C24

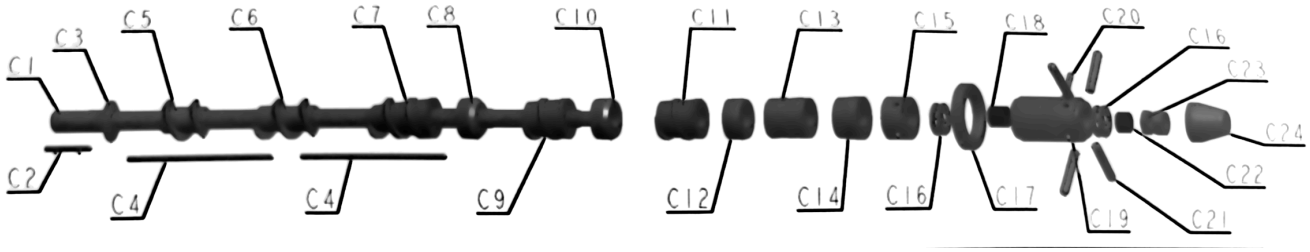

ITEM	NAME	QTY, PCS
C1	Main shaft	1
C2	Key C16 × 150	1
C3	Spacing collar	1
C4	Key B16 × 575	2
C5	1# Squeeze spiral	1
C6	2# Squeeze spiral	1
C7	3# Squeeze spiral	1
C8	4# Squeeze spiral Ø105	1
C9	5# Squeeze spiral	1
C10	4# Squeeze spiral Ø115	1
C11	6# Squeeze spiral	1
C12	4# Squeeze spiral Ø125	1

ITEM	NAME	QTY, PCS
C13	7# Squeeze spiral	1
C14	The spiral for cakes out	1
C15	Lock nut	1
C16	Bearing 51311	2
C17	Tight nut	1
C18	Long oil-retaining bearing	1
C19	Adjusting bolt	1
C20	Small handle	2
C21	Big handle	4
C22	Short oil-retaining bearing	1
C23	Thin / Thick nut	1 each
C24	Safety cover	1

Spiral shaft

Exploded view and parts list
Items C1–C24

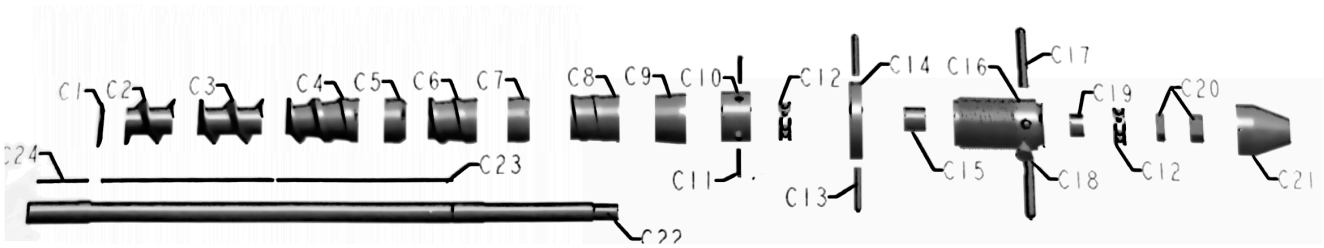

ITEM	NAME	QTY, PCS
C1	Spacing collar	1
C2	1# Squeeze spiral	1
C3	2# Squeeze spiral	1
C4	3# Squeeze spiral	1
C5	4# Squeeze spiral Ø105	1
C6	5# Squeeze spiral	1
C7	4# Squeeze spiral Ø120	1
C8	6# Squeeze spiral	1
C9	The spiral for cakes out	1
C10	Lock nut	1
C11	Bolt M12 × 65	2
C12	Bearing 51311	2

ITEM	NAME	QTY, PCS
C13	Small handle	2
C14	Tight nut	1
C15	Long oil-retaining bearing	1
C16	Adjusting bolt	1
C17	Big handle	4
C18	Oil cup A25	1
C19	Short oil-retaining bearing	1
C20	Thin / Thick nut	1 each
C21	Safety cover	1
C22	Main shaft	1
C23	Key B16 × 480	2
C24	Key C16 × 150	1

Squeeze cage and squeeze loops

Exploded view and parts list
Items B1–B16

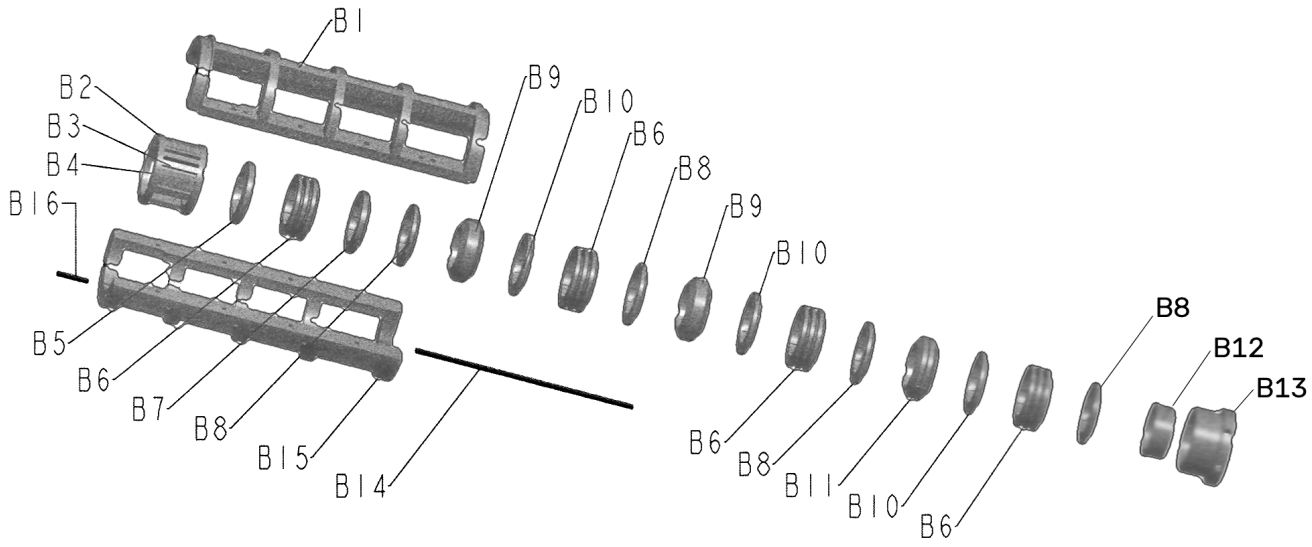

ITEM	NAME	QTY, PCS
B1	Top cage	1
B2	Ring for setting up squeeze bars	1
B3	Squeeze bars	23
B4	Spacer	1
B5	1# Squeeze loop	1
B6	2# Squeeze loop	12
B7	3# Squeeze loop	1
B8	4# Squeeze loop	4

ITEM	NAME	QTY, PCS
B9	5# Squeeze loop	2
B10	6# Squeeze loop	3
B11	A5# Squeeze loop	1
B12	Loop for cakes out	1
B13	Pressing bolt	1
B14	Key B16 × 730	1
B15	Bottom cage	1
B16	Key C16 × 110	1

GUANGXIN · OIL PRESS YZYX140

Feeding hopper (ordinary gearbox)

Exploded view and parts list
Items D1–D19

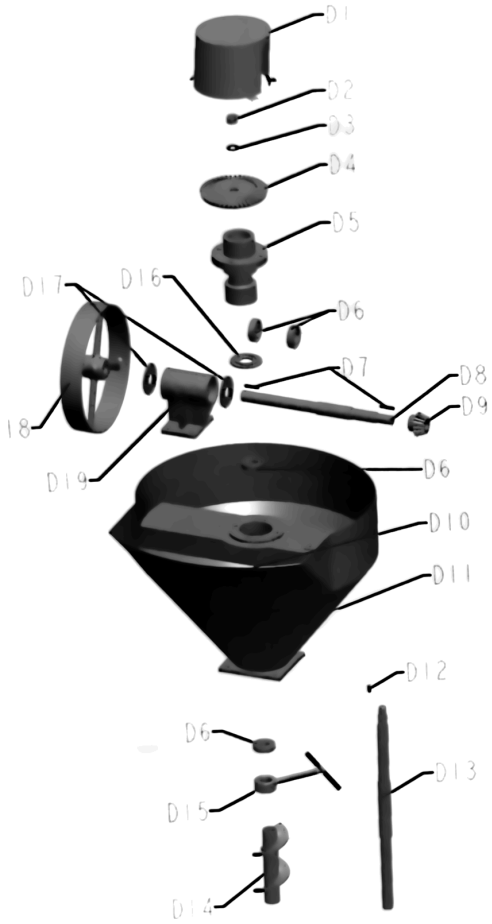

ITEM	NAME	QTY, PCS
D1	Safety cover	1
D2	M20 Hexagon nut	1
D3	Gaskets	1
D4	Big bevel gear	1
D5	Bearing support No.2	1
D6	Bearing 6206	4
D7	Key A8 × 40	2
D8	Transmission shaft	1
D9	Small bevel gear	1
D10	Bearing 51206	1

ITEM	NAME	QTY, PCS
D11	Hopper	1
D12	Key A8 × 20	1
D13	Feeding shaft	1
D14	Feeding screw	1
D15	Stir device	1
D16	Bearing cover No.2	1
D17	Bearing cover No.1	2
D18	Belt pulley	1
D19	Bearing support No.1	1

GUANGXIN · OIL PRESS YZYX140GX

Feeding hopper (larger gearbox)

Exploded view and parts list
Items D1–D16

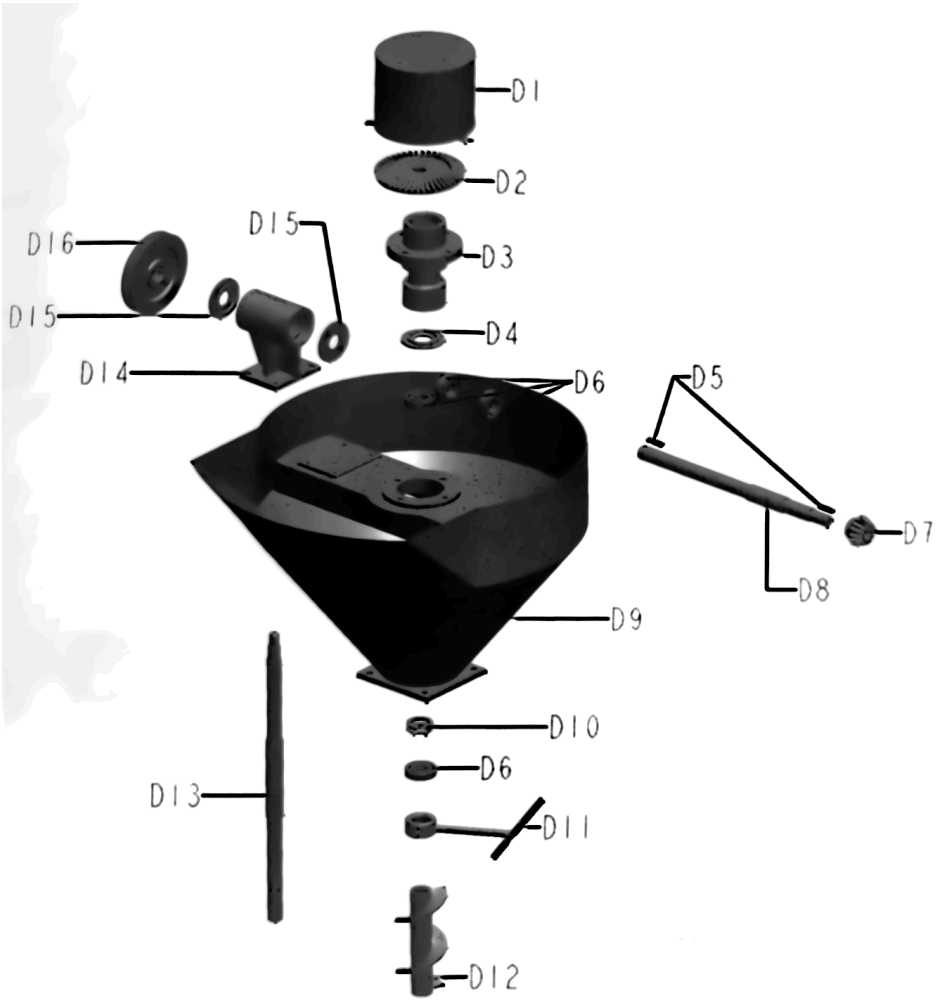

ITEM	NAME	QTY, PCS
D1	Safety cover	1
D2	Big bevel gear	1
D3	Vertical bearing support	1
D4	Bearing cover No.1	1
D5	Key A8 × 25	2
D6	Bearing 6206	4
D7	Small bevel gear	1
D8	Transmission shaft	1

ITEM	NAME	QTY, PCS
D9	Hopper	1
D10	Bearing 51206	1
D11	Stir device	1
D12	Feeding screw	1
D13	Feeding shaft	1
D14	Horizontal bearing support	1
D15	Bearing cover No.2	2
D16	Belt pulley	1

Machine stand

Part drawing
Main elements

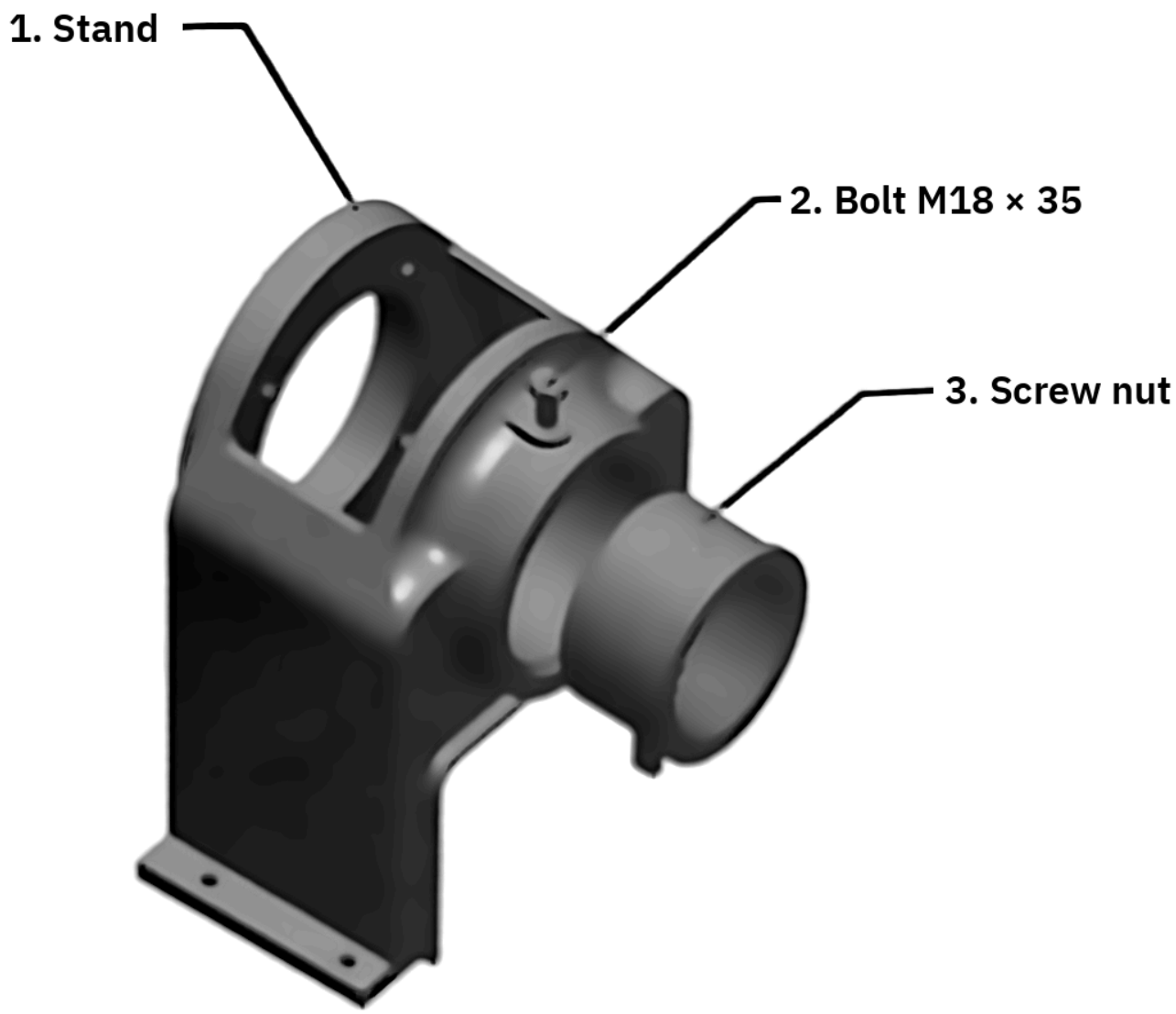

ITEM	NAME	QTY, PCS
1	Stand	1
2	Bolt M18 × 35	1
3	Screw nut	1

GUANGXIN · OIL PRESS YZYX140 SERIES

Squeeze spirals and spiral axis

Spiral order on the shaft
Section lengths, mm

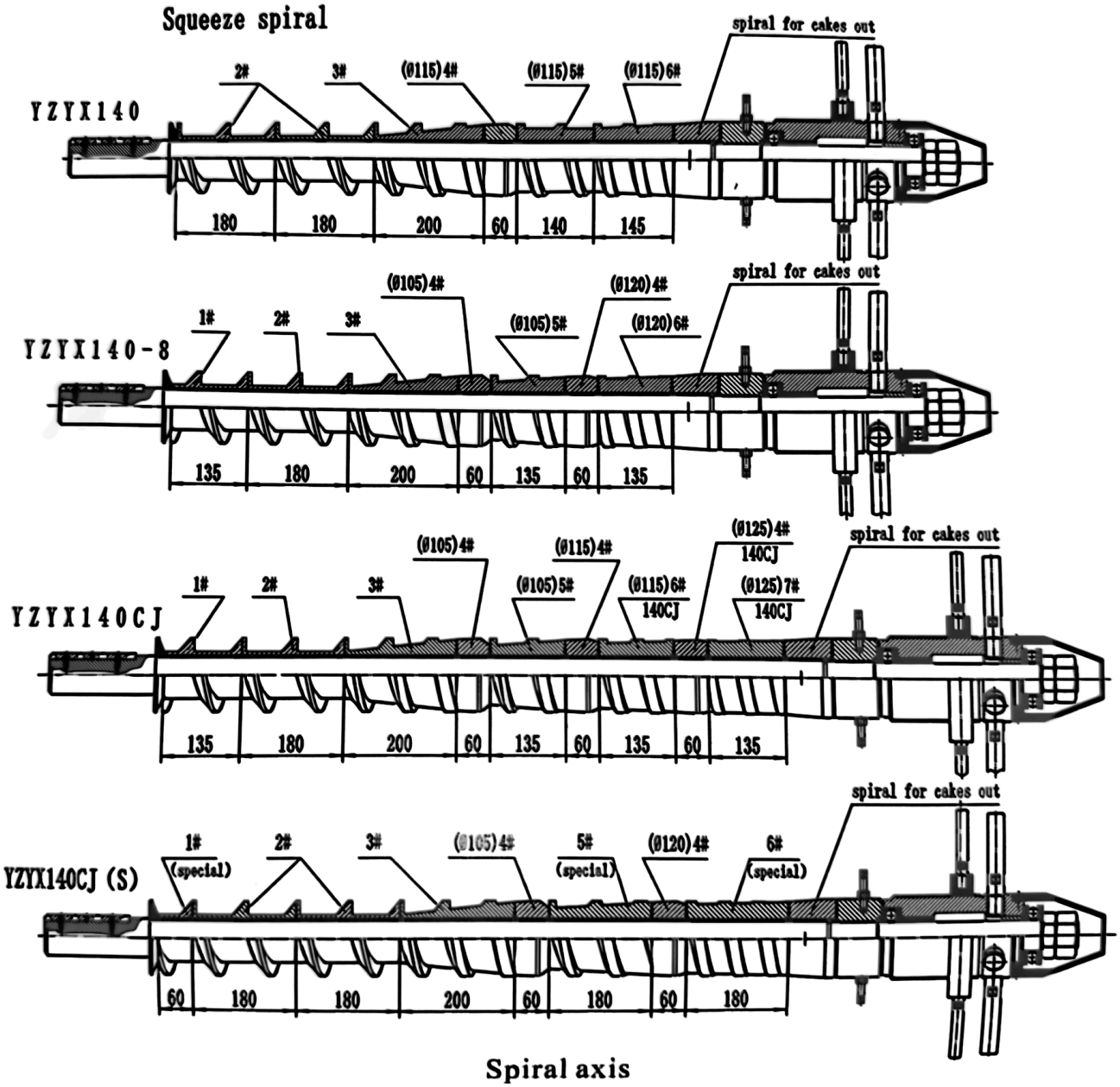

ITEM	NAME	SHAFTS
YZYX140	last part: spiral for cakes out	1
YZYX140-8	last part: spiral for cakes out	1
YZYX140CJ	last part: spiral for cakes out	1
YZYX140CJ(S)	last part: spiral for cakes out	1

Squeeze loops in the cage

Models YZYX140, -8, CJ, CJ(S)
Loops 1#–6#, A5#

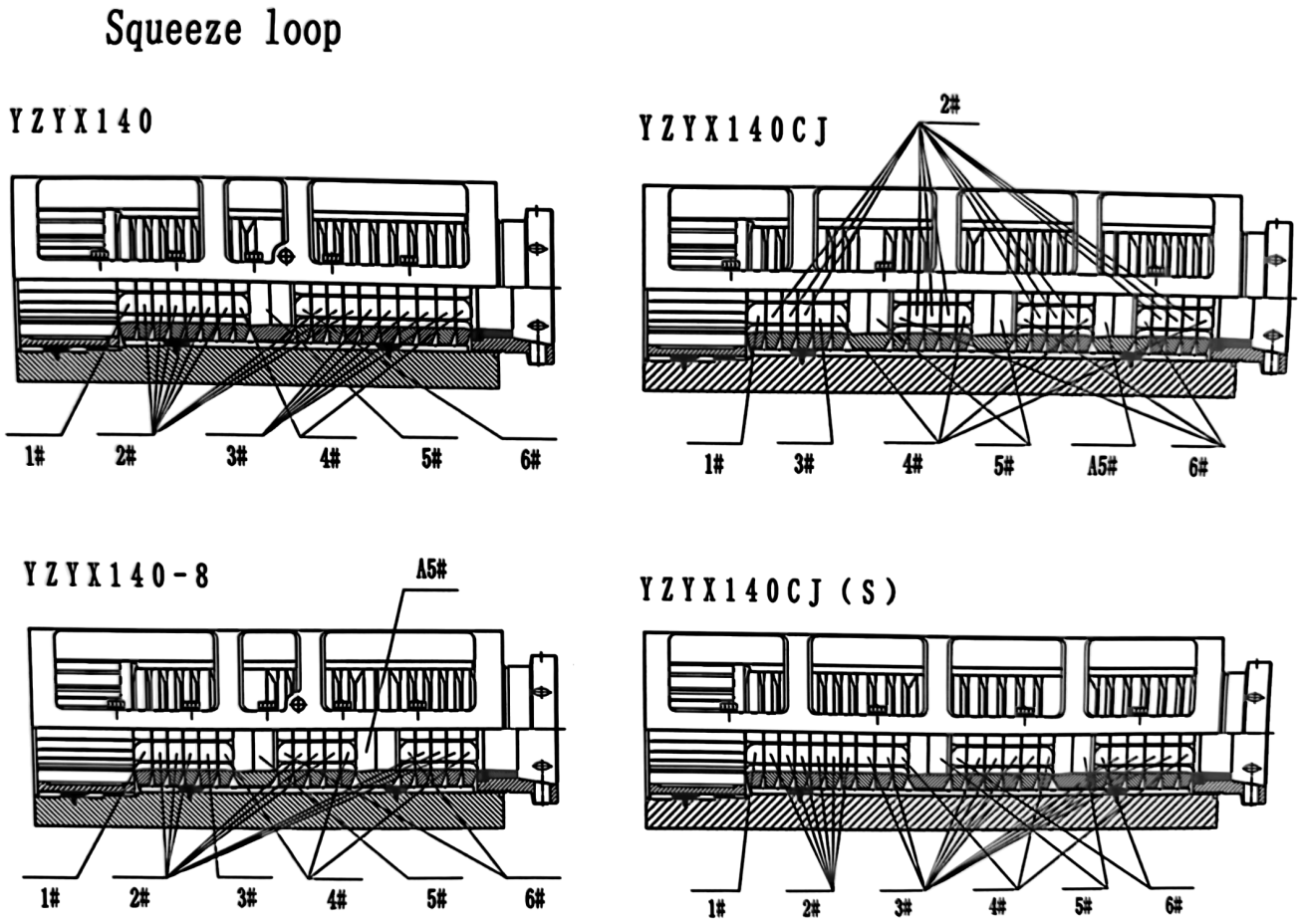

Numbers under the drawings (1#...6#, A5#) are squeeze loop numbers; their profiles are on the next page.

Squeeze loop profiles

Width and chamfers
Loop marking

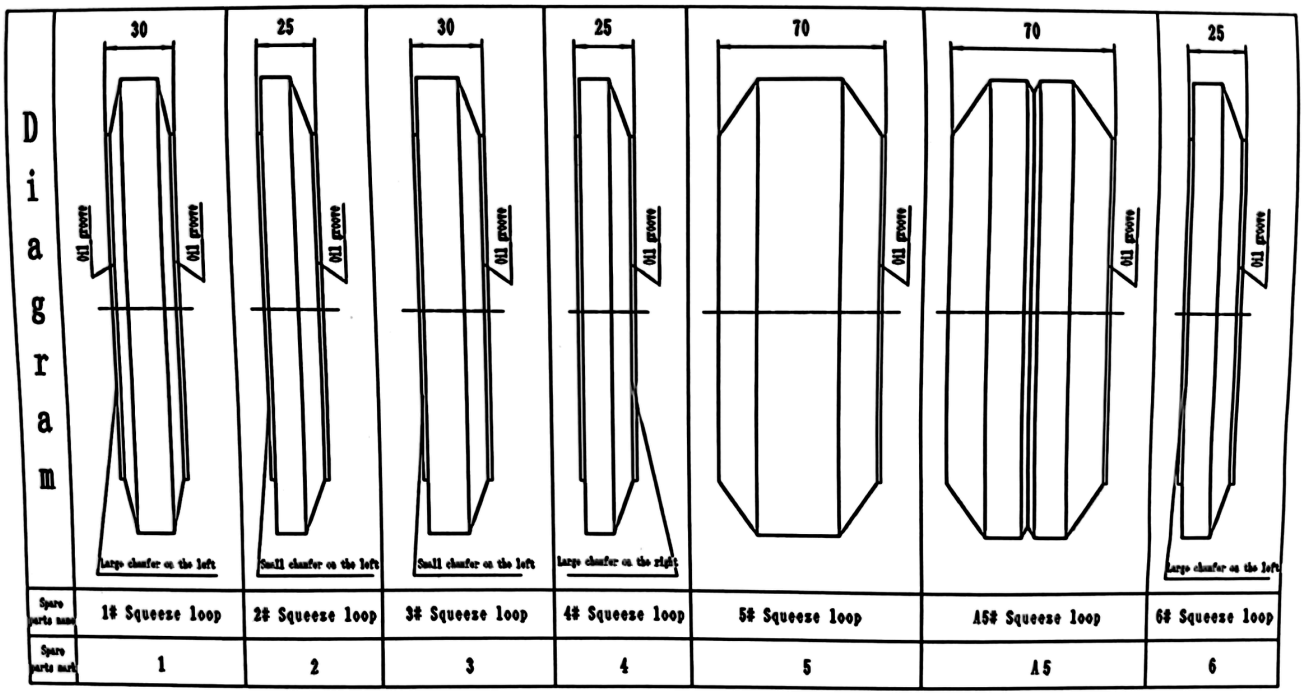

ITEM	NAME	WIDTH, MM
1	large chamfer on the left	30
2	small chamfer on the left	25
3	small chamfer on the left	30
4	large chamfer on the right	25

ITEM	NAME	WIDTH, MM
5	—	70
A5	groove in the middle	70
6	large chamfer on the left	25

Electrical control schematic

Temperature control oil press
380 V, three phase

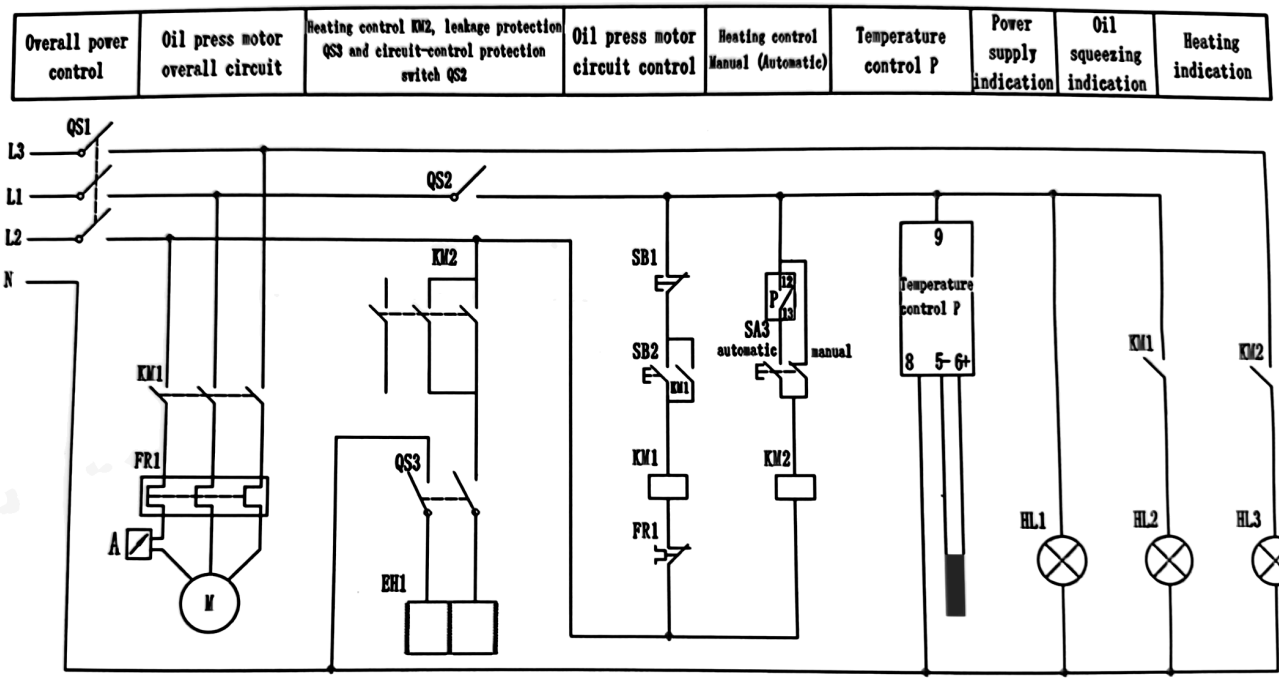

L1, L2, L3, N are the 380 V supply lines. Through QS1 (100 A) they feed KM1, KM2 and QS2, then FR1, P, motor M and heater EH1.

ITEM	NAME	QTY, PCS
QS1	Automatic air switch, main, 100 A	1
QS2	Circuit-control protection switch	1
QS3	Leakage protection switch (heating)	1
KM1	Oil press motor contactor	1
KM2	Electric heater contactor	1
FR1	Thermal relay (overload protection)	1
M	Oil press motor 18.5 or 22 kW	1
A	Current meter	1

ITEM	NAME	QTY, PCS
EH1	Electric heater 220 V, 3 kW	1
SB1	Stop button	1
SB2	Start button	1
SA3	Rotary switch: manual / automatic heating	1
P	Digital temperature controller	1
HL1	Power indicator	1
HL2	Oil press indicator	1
HL3	Heating indicator	1